REVISION HISTORY			REVISION APPROVAL			
REV	ECO	DESCRIPTION	PROJECT ENGINEER	APPROVAL DATE	DOCUMENT CONTROL	APPROVAL DATE
A	E12682	INITIAL RELEASE	TP	3/2/04	KF	3/5/04

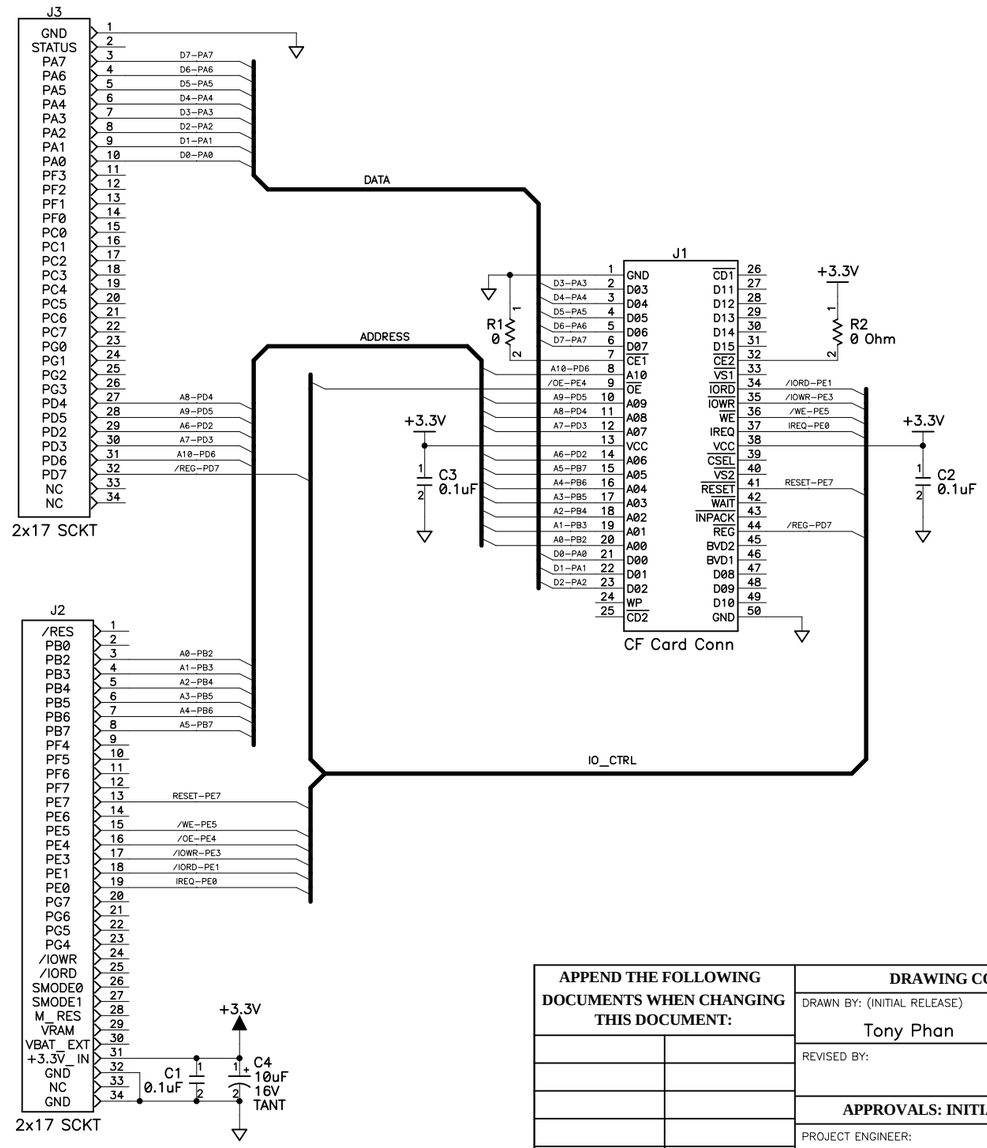

NOTES: UNLESS OTHERWISE SPECIFIED;
1. ALL RESISTOR VALUES ARE IN OHMS, 1/16W, 5%
2. ALL CAPACITORS ARE 16VDC OR HIGHER.
3. THE ORIGINATION SOURCE OF A VOLTAGE IS REPRESENTED BY (VCC), AND ALL REFERENCES TO THAT VOLTAGE ARE REPRESENTED BY (VCC).

COPYRIGHT 2004, Z-WORLD, INC.

APPEND THE FOLLOWING DOCUMENTS WHEN CHANGING THIS DOCUMENT:		DRAWING CONTENT:		TITLE	
		DRAWN BY: (INITIAL RELEASE) Tony Phan	17FEB04	SCHEMATIC DIAGRAM CF ADAPTER BOARD	Z-WORLD 2900 SPAFFORD ST. DAVIS, CA 95616 530 - 757 - 4616
		REVISED BY:			
		APPROVALS: INITIAL RELEASE			
		PROJECT ENGINEER:		SIZE B	DWG NO. 090-0196
		ENGINEERING MANAGER:			
		SIGNATURES	DATE	SCALE NONE	RELEASE DATE TBD / SHEET 1 OF 1