TO:資晟 's FAX:2281 2019

規格確認書

SPECIFICATION FOR APPROVAL

客戶 CUSTOMER: 資晟

客戶圖號 CUSTOMER'S DWG NO.

核對號碼 REVISION NO.

本公司圖號 OUR DWG NO. WT-2935

數量 QUANTITY: 3 個 PCS.

日期 DATE: FEB. 27, 1995

項目 ITEM. TRANSFORMER

	"√"	客戶簽字 CUSTOMER'S SIGNATURE	說明 NOTE
完全核准 FULL APPROVED			
狀況核准 CONDITIONAL APPROVED			
拒絕 RCJECTED			

緯岑電子股份有限公司

Woet Tsern Electronic Co., Ltd.

台北市景美區興隆路三段61號2樓

2ND FL. NO. 61, HSING-LUNG RD. SEC. 3,
TAIPEI 11715, TAIWAN, R. O. C.
PHONE: (02) 934-4565 • 935-3484 • 935-0933
FAX: (02) 932-2937

SPECIFICATION FOR APPROVAL

CUSTOMER	C133			DWG.NO.	WT-2935
PART NO. DWG.NO.		DESCRIPTION	TRANSFORMER	DATE	FEB. 27, 1995

UNIT : mm

FRONE VIEW

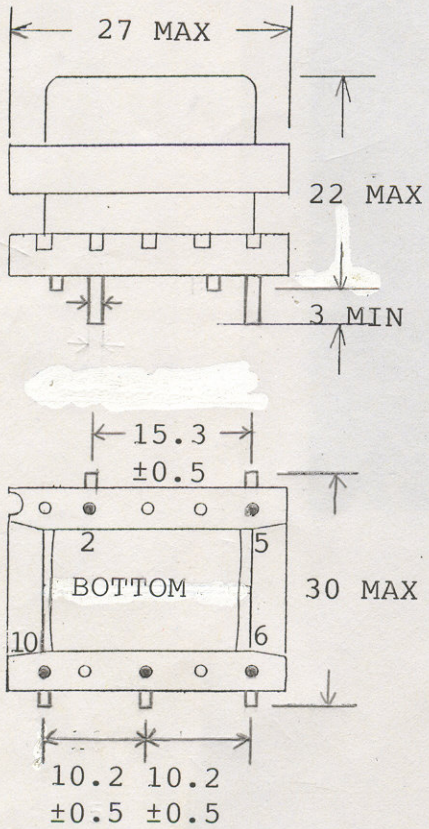

SIDE VIEW

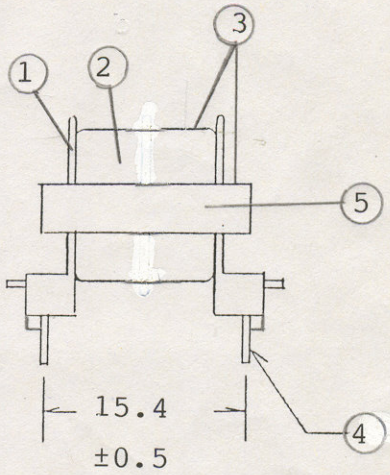

SCHEMATIC :

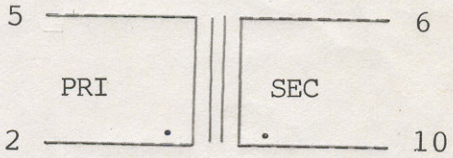

1. INDUCTANCE @1 KHz,1V(SER.)
   PIN 2-5 : 435 mH±25%
   PIN 10-6 : 5.5 mH ±25%
2. DC RESISTANCE :
   PIN 2-5 : 21 ohm MAX
   PIN 10-6 : 3 ohm MAX
3. HI-POT TEST :
   PRI TO SEC & CORE 1KVAC/5mA FOR ONE MINUTE.
   SEC TO CORE 1KVAC/5mA FOR ONE MINUTE.
4. INSULATION RESISTANCE :
   500VDC/100MEGAOHMS BETWEEN PRI & SEC,SEC & CORE,PRI & CORE.